4-7 Magnetism and electromagnetism – Physics

1.1 This question is about magnets.

Which statements apply to **permanent magnets**, which apply to **electromagnets** and which apply to **both**?

Tick the correct boxes.

[2 marks]

	Permanent magnets	**Electromagnets**	**Both**
Need an electric current to work			
Have a constant magnetic field			
Can be turned off			
Have north and south poles			
Often contain a coil of wire			

1.2 What is an **induced** magnet?

Tick the correct box.

[1 mark]

A permanent magnet made by passing a current through a piece of steel ☐

A temporary magnet made by repeatedly heating a piece of steel ☐

A permanent magnet made by repeatedly stroking a piece of steel with a magnet ☐

A temporary magnet made by touching a piece of steel with another magnet ☐

This document is licensed to Brannel School

1.3 Describe how to find the direction of the magnetic field around a permanent magnet using a small compass.

[3 marks]

2.0 A student was investigating the effect of the size of current on the strength of an electromagnet.

Figure 1 shows the equipment she used.

Figure 1

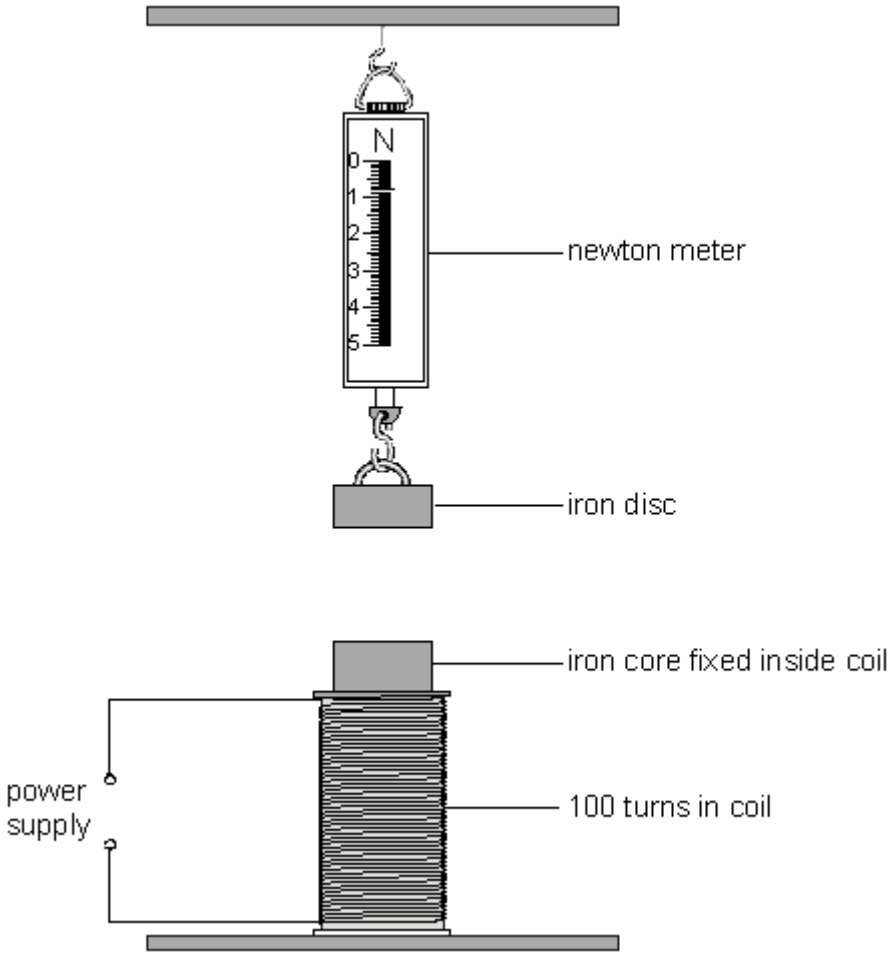

This document is licensed to Brannel School

2.1 Describe how the student could carry out an investigation to find the relationship between the current in the coil and the force on the iron disc.

[4 marks]

This document is licensed to Brannel School

2.2 The student made two electromagnets, one with 100 turns of wire in the coil and one with 200 turns.

She carried out the investigation with each of the coils and plotted **Graph 1**.

Graph 1

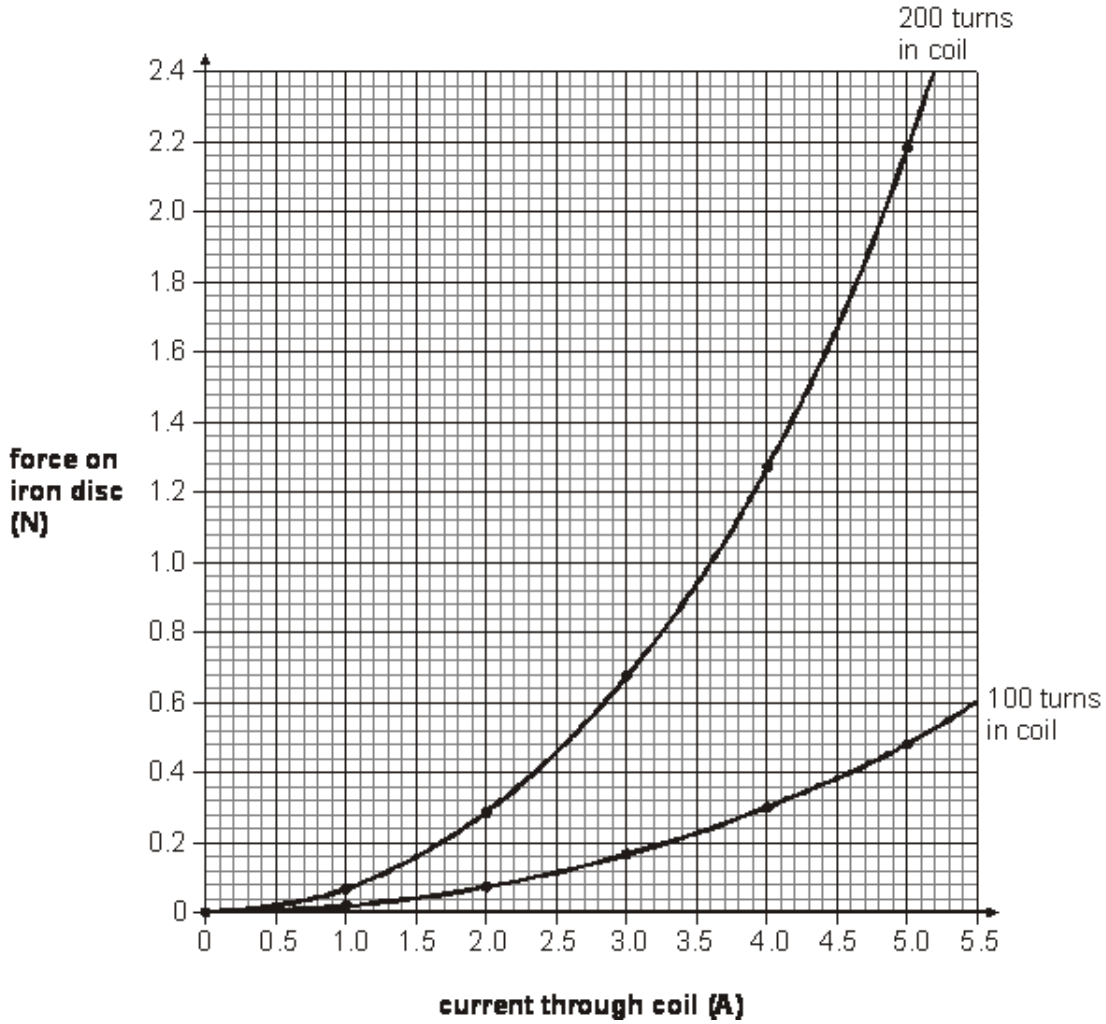

The student wanted to find the ratio of the force from the two different coils at each current.

Her results are shown in **Table 1**.

Table 1

Current	100 coils	200 coils	ratio
1.0	0.02	0.07	1 : 3.50
2.0	0.08	0.28	1 : 3.50
3.0	0.16	0.68	1 : 4.25
4.0	0.30	1.28	1 : 4.27
5.0			

Complete the last row on **Table 1**.

[2 marks]

This document is licensed to Brannel School

2.3 The student wrote the following conclusion:

The relationship between the current and the ratio of the force from the two coils is directly proportional.

Was the student correct?

Explain your answer.

[2 marks]

3.0 The left-hand rule can be used to identify the direction of the force acting on a current-carrying conductor in a magnetic field.

3.1 Use words and phrases from the box to label **Figure 2**.

[3 marks]

current	**force**	**magnetic field**	**magnetic flux density**	**potential difference**

Figure 2

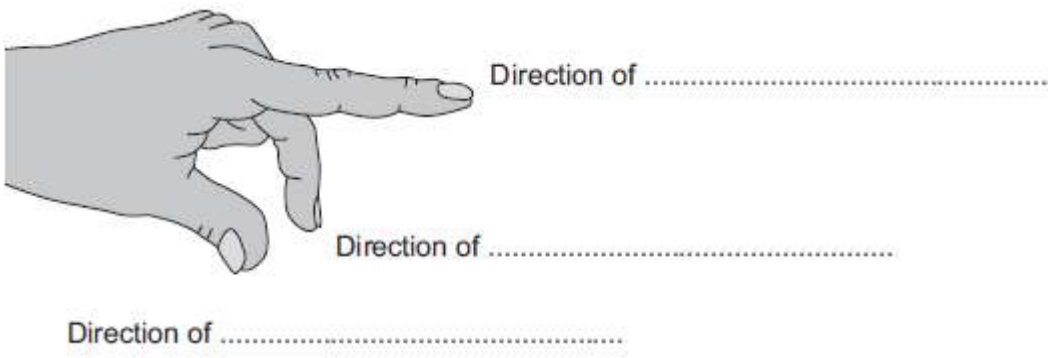

This document is licensed to Brannel School

Figure 3 shows a wire held between the poles of a U-shaped magnet on a top pan balance.

Figure 3

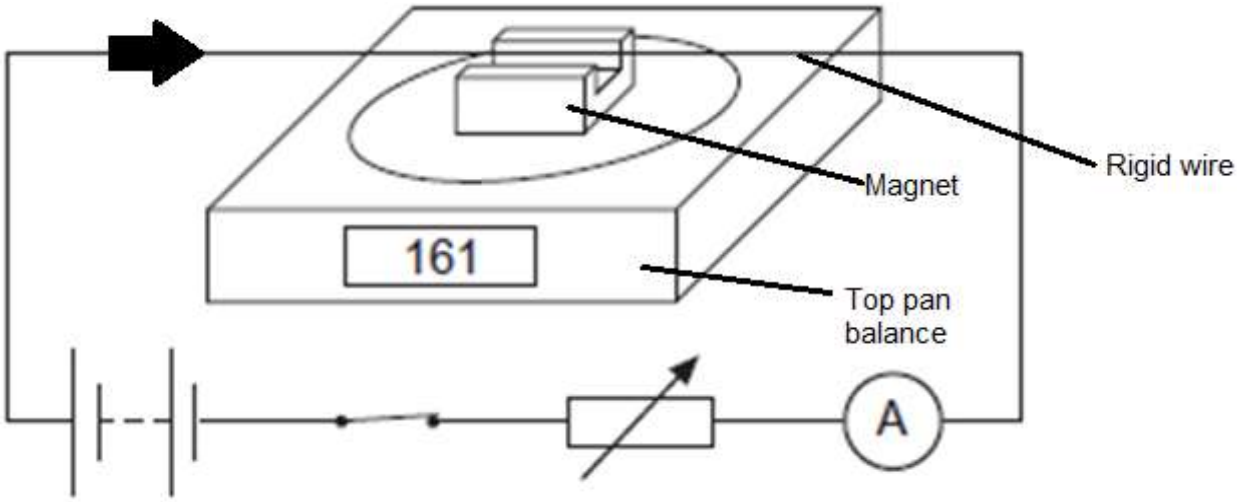

The magnet was placed on the top pan balance before the current was switched on.

The balance was then zeroed.

After the current was switched on, the balance read 161 g.

The arrow shows the direction of the current in the circuit.

3.2 Which direction was the force on the **balance**?

Tick the correct box.

[1 mark]

In the same direction as the arrow	☐
Down onto the balance	☐
Up from the balance	☐
From the front of the balance to the back of the balance	☐

This document is licensed to Brannel School

3.3 Due to Newton's third law of motion, the force on the **wire** is in the **opposite** direction to the force on the balance**.**

Which direction was the magnetic field?

Tick the correct box.

[1 mark]

In the same direction as the arrow	☐
Down onto the balance	☐
Up from the balance	☐
From the front of the balance to the back of the balance	☐

3.4 Explain what would happen to the reading on the balance if the current in the wire was increased.

[2 marks]

This document is licensed to Brannel School

4.0 One simple design of an electric motor is shown in the **Figure 4**. It has a coil which spins between the poles of two magnets.

Figure 4

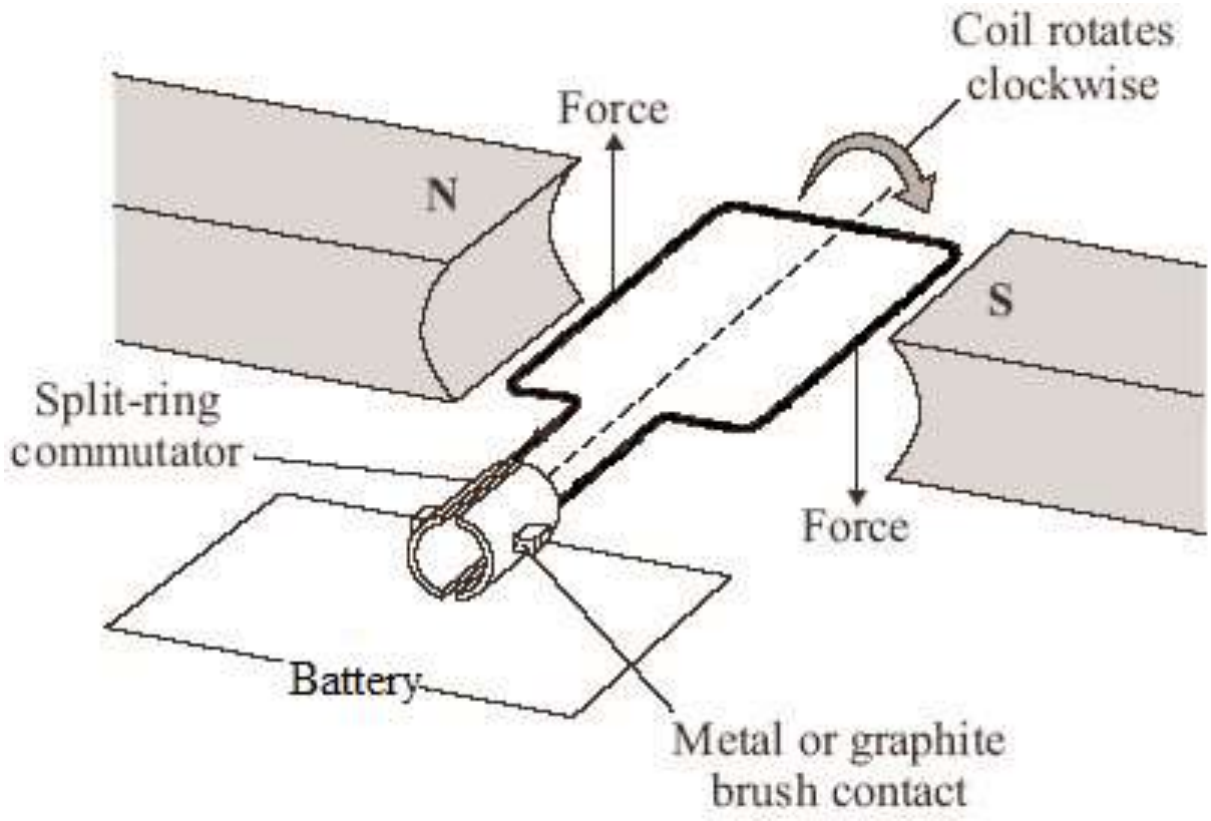

4.1 Add an arrow to **figure 4** showing the direction of the current in the wire from the battery.

[1 mark]

4.2 The motor is part of an electric drill. It needs to be able to change direction and speed.

Describe how the **direction** and **speed** of the drill could be varied **without** changing the way the motor is constructed.

[2 marks]

Direction: _____

_____

Speed: _____

_____

This document is licensed to Brannel School

4.3 State **two other** ways that the **construction** of the motor could be changed to increase its speed.

[2 marks]

1. _____

_____

2. _____

_____

4.4 A student builds a model motor. The magnetic field between the poles is 3×10^{-2} T. The length of one side of the coil in between the poles is 2 cm. The current is 0.5 A.

Calculate the force on the coil.

Give your answer in standard form.

[2 marks]

Force: _____N

This document is licensed to Brannel School

5.0 **Figure 5** shows a part of the National Grid.

Figure 5

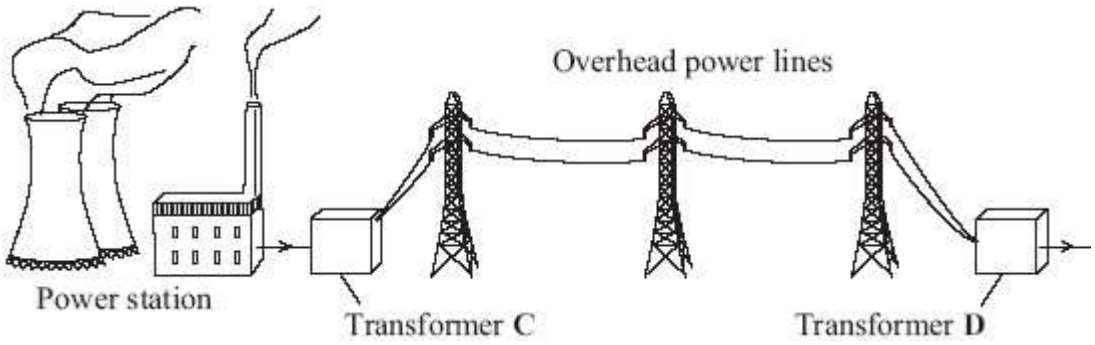

5.1 Transformers **C** and **D** are different types.

Explain why **two** different types of transformers are needed in the National Grid.

[3 marks]

This document is licensed to Brannel School

The cables used in the National Grid can either be suspended from pylons and run overhead, or buried underground.

When an electric current flows through a transmission cable, a magnetic field is produced.

Figure 6 shows how the strength of the magnetic field varies with distance from both overhead and underground transmission cables that carry the same current.

Figure 6

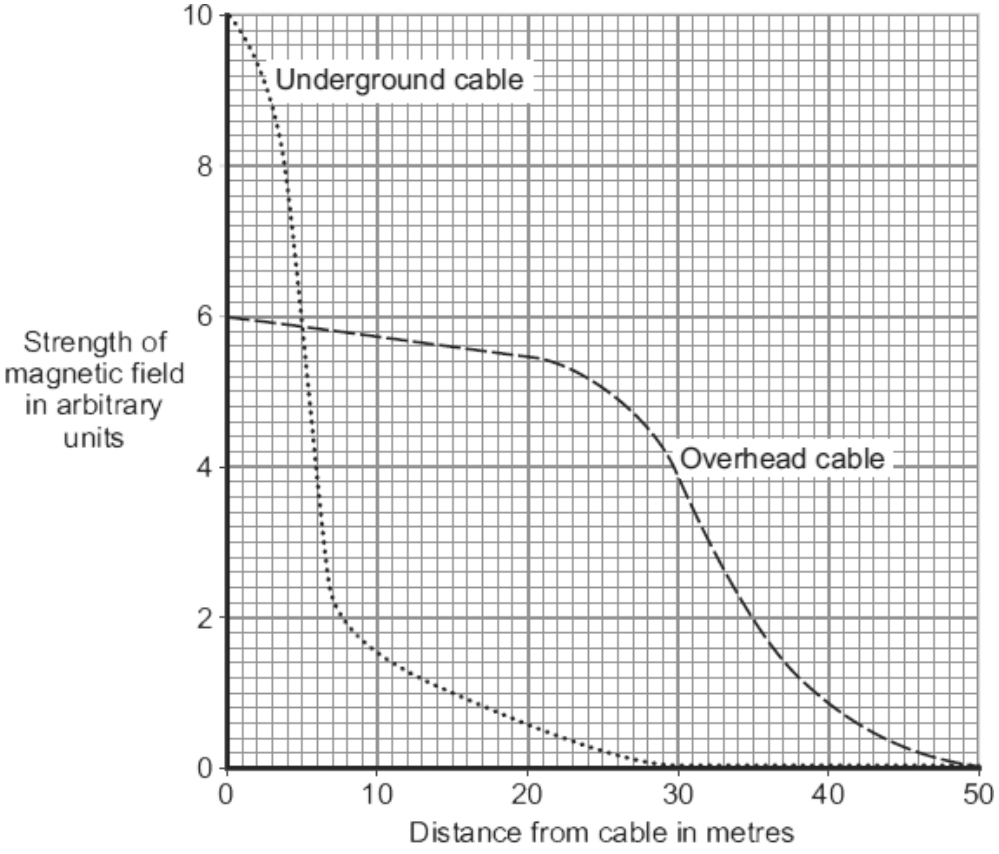

5.2 A politician sees **Figure 6** and says "Underground cables are safer as they have a lower strength of magnetic field."

Evaluate his claim.

[2 marks]

This document is licensed to Brannel School

5.3 The slope of the graph shows the rate of change of magnetic field strength with distance.

Calculate the slope of the graph for the overhead cable between 0 and 20 m.

[2 marks]

Rate of change of magnetic field with distance: _____ arbitrary units /m

6.0 **Figure 7** shows a transformer

Figure 7

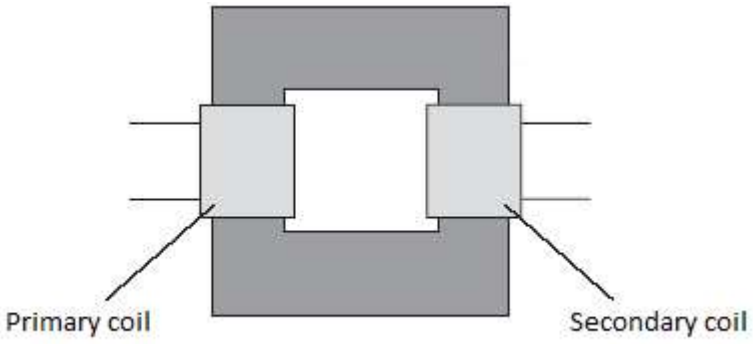

6.1 Explain why is it **not** possible to use a transformer with a battery.

[1 mark]

_____

_____

6.2 Describe the construction of a **step up** transformer.

[2 marks]

_____

_____

_____

_____

_____

_____

This document is licensed to Brannel School

6.3 A transformer has 2800 turns on its primary coil and 700 turns on its secondary coil. The potential difference across the secondary coil is 12 V.

Calculate the potential difference across the primary coil.

[2 marks]

Potential difference across the primary coil = _____ V

7.0 **Figure X** shows parts of a device used to measure earthquakes called a geophone.

Figure X

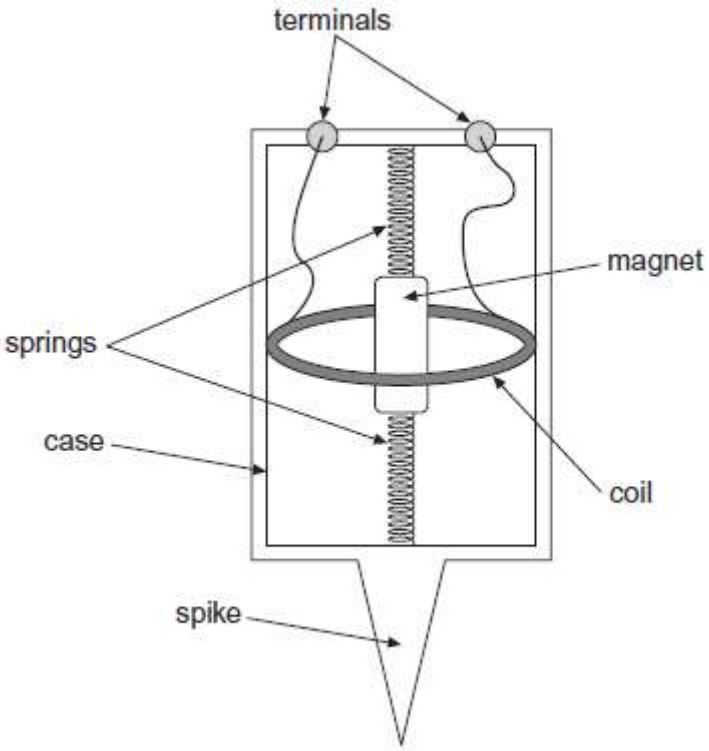

The spike attaches the geophone firmly to the ground.

An ammeter is attached to the terminals.

When an earthquake occurs, the case and coil move up and down due to the Earth's movement.

Because the magnet is heavy, it does not move during an earthquake.

This document is licensed to Brannel School

Explain how the readings on the ammeter would change when there is:

- No earthquake
- A small earthquake
- A large earthquake

[6 marks]

This document is licensed to Brannel School

MARK SCHEME

<table>
<tr><th>Qu No.</th><th></th><th>Extra Information</th><th>Marks</th></tr>
<tr><td>1.1</td><td>
<table>
<tr><td>Need an electric current to work</td><td>Electromagnets</td></tr>
<tr><td>Have a constant magnetic field</td><td>Permanent magnets</td></tr>
<tr><td>Can be turned off</td><td>Electromagnets</td></tr>
<tr><td>Have north and south poles</td><td>Both</td></tr>
<tr><td>Often contain a coil of wire</td><td>Electromagnets</td></tr>
</table>
</td><td>All rows correct: 2 marks
3 or 4 rows correct: 1 mark</td><td>2</td></tr>
<tr><td>1.2</td><td>A temporary magnet made by touching a piece of steel with another magnet</td><td></td><td>1</td></tr>
<tr><td>1.3</td><td>Place compass at different points around the compass
Indication of how to draw eg note down the direction of the compass at each point around the magnet / compass points along field lines
Join each individual direction to form field lines</td><td>Accept clearly labelled diagram for any or all points</td><td>1
1
1</td></tr>
</table>

Qu No.		Extra Information	Marks
2.1			
Level 2:	A clear, coherent description of a safe experiment with given values of current (eg 0.5, 1.0, etc up to a maximum of about 5A) and details of repeats. Includes letting the equipment cool down between experiments.		3-4
Level 1:	A description of an experiment that would allow valid results to be obtained. May include currents higher than 5 A or omit details of number of readings to be taken or repeat measurements.		1-2
	Set current to small value Measure force on the iron disc Repeat at regular increases of current Repeat at least 2 more times Allow equipment to cool between measurements		
2.2	0.48 and 2.18 4.54	Allow +/- 0.2 for each reading Allow ecf from marking point 1	1 1
2.3	(No) The ratio increases with increased current But as not in a linear fashion / example given		 1 1

This document is licensed to Brannel School

Qu No.		Extra Information	Marks
3.1	Magnetic field Current Force	Correct order only	1 1 1
3.2	Down onto the balance		1
3.3	From the front of the balance to the back of the balance		1
3.4	Reading would increase As the magnetic flux density would increase		1 1

Qu No.		Extra Information	Marks
4.1	Arrow showing anticlockwise movement of the current		1
4.2	Direction: Change direction of current / turn the battery around Speed: Change amount of current		1 1
4.3	Increase number of turns Increase the strength of the magnet		1 1
4.4	$F = BIL = 3 \times 10^{-2} \times 0.5 \times 0.04$ $= 6 \times 10^{-4}$ (N)		1 1

Qu No.		Extra Information	Marks
5.1	To step up voltage (across the cables)/decrease the current (through the cables) Reduces thermal energy transfer / Increases efficiency (in the cables) Then step down voltage (across the cables) / increase the current (through the cables) (near users)		1 1 1
5.2	**One of:** Politician is correct that magnetic field from underground cable drops off in short distance **Or** But it starts higher No link to safety in the graph / no health effects		1 1
5.3	Slope = (5.4-6.0)/20 =-0.03 (/m)	 Allow 0.03 for one mark	1 1

This document is licensed to Brannel School

Qu No.		Extra Information	Marks
6.1	Transformers need alternating current / batteries produce direct current		1
6.2	Primary coil has fewer turns than secondary coil / secondary coil has more turns than primary coil Iron core		1 1
6.3	2800 / 700 = ? / 12 48 (V)		1 1

Qu No.		Extra Information	Marks
7.0			
Level 3:	A clear, coherent answer clearly linking the movement of the coil around the magnet to the changing current in the ammeter recognising the link between the frequency of the movement of the Earth and the frequency of the alternating current in the coil. Student uses correct scientific language throughout. No major errors in physics.		5-6
Level 2:	A clear answer, outlining the main points, but may be out of sequence. Some correct scientific language used with maybe a few minor errors in physics.		3-4
Level 1:	Isolated points with errors in physics and/or incorrect or inconsistent use of scientific language.		1-2
Indicative content			
	No earthquake = no movement so no current in the coil when there is an earthquake there coil moves relative to the magnet cutting the magnetic field lines so a current is induced in the coil the current will change direction each time the movement of the earth changes direction / alternating current. a larger earthquake likely to have a larger amplitude so higher (maximum) current		

This document is licensed to Brannel School